PARTS LIST

MAG500RS

CONTENTS

1. FRAME, GEARCASE ..... 1 ~ 4
2. ACCESSORIES ..... 5 ~ 6
3. ENGINE ..... 7 ~ 10
4. CARBURETOR, FUEL TANK ..... 11 ~ 14

2015. 09.

MARUYAMA

P/N 522633-4

1. MAG500RS
FRAME, GEARCASE

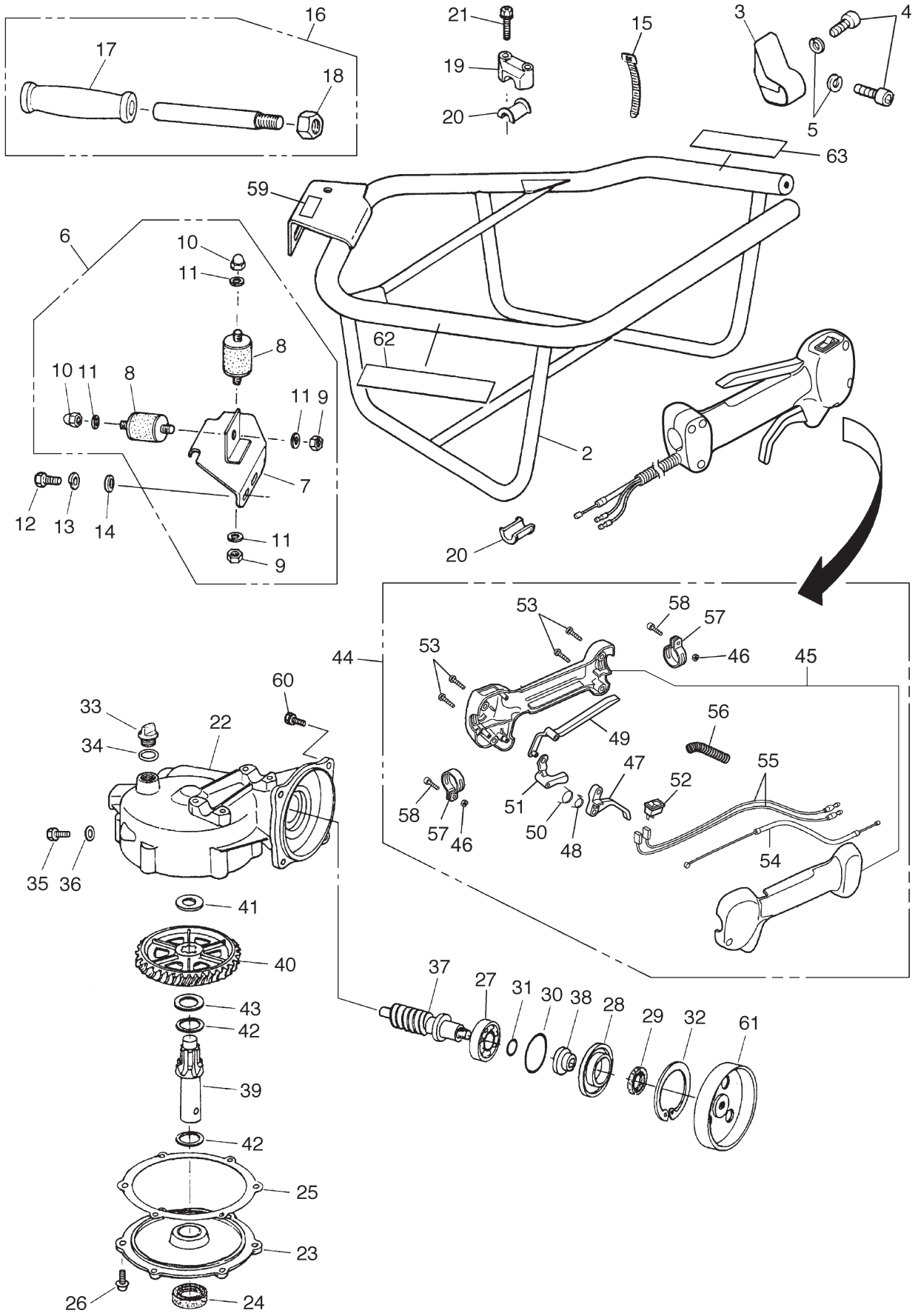

Ref. No.	Part No.	Part Name	Q'ty	Remarks
1-1	363518	MAG500RS	1	
1-2	230000	Frame	1	
1-3	230001	Bracket, Frame	1	
1-4	087925	Bolt	2	M10x25
1-5	126231	Spring Washer	2	M10
1-6	229993	Bracket Ass'y	1	Incl.7-11
1-7	229994	Bracket	1	
1-8	229995	Mount	2	
1-9	081030	Nut	2	M6
1-10	229996	Nut	2	M6
1-11	126568	Spring Washer	4	M6
1-12	229997	Bolt	2	M6x20
1-13	126568	Spring Washer	2	M6
1-14	229999	Washer	2	
1-15	230002	Band	1	
1-16	230003	Handle Comp.	1	Incl.17,18
1-17	230004	Grip	1	
1-18	081069	Nut	1	M14
1-19	230005	Holder	2	
1-20	230006	Spacer	4	
1-21	092556	Bolt	4	M6x30
1-22	230008	Gearcase Comp.	1	
1-23	230009	Cover Comp.	1	
1-24	230010	Oil Seal	1	
1-25	230011	Gasket	1	
1-26	092001	Screw	6	M6x20
1-27	230012	Bearing	1	
1-28	230013	Retainer	1	
1-29	230014	Oil Seal	1	
1-30	230015	O-Ring	1	
1-31	230016	O-Ring	1	
1-32	056967	Snap Ring	1	#62
1-33	230017	Plug	1	
1-34	230018	O-Ring	1	
1-35	230019	Bolt	1	M6x10
1-36	230020	Gasket	1	
1-37	230021	Worm	1	
1-38	230022	Collor	1	
1-39	230023	Shaft	1	
1-40	230024	Wheel	1	
1-41	230025	Washer	1	
1-42	230026	Washer	2	
1-43	230027	Shim	0~3	
1-44	230654	Grip Ass'y	1	Incl.45-58
1-45	232132	Grip Comp.	1	

1. MAG500RS
FRAME, GEARCASE

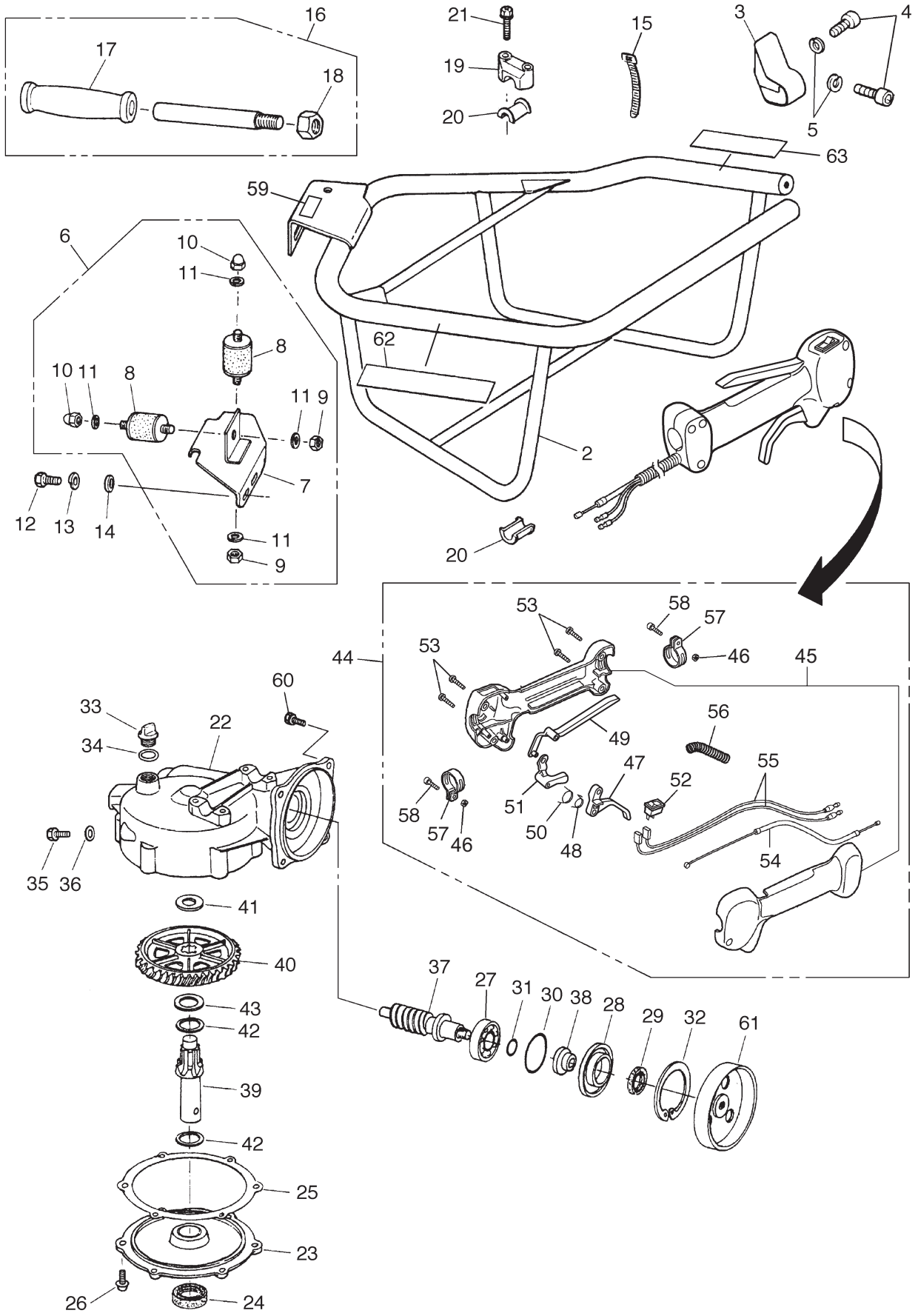

Ref. No.	Part No.	Part Name	Q'ty	Remarks
1-46	230662	Nut	2	M5
1-47	230657	Lever	1	
1-48	230658	Spring	1	
1-49	230659	Lever-S	1	
1-50	230035	Spring	1	
1-51	230660	Lever	1	
1-52	230037	Switch	1	
1-53	230038	Screw	4	
1-54	230039	Cable Comp.	1	
1-55	230661	Cord Comp.	2	
1-56	230041	Tube	1	
1-57	230042	Band	2	
1-58	230043	Bolt	2	
1-59	228043	Label	1	
1-60	092552	Bolt	4	M6x20
1-61	229856	Drum	1	
1-62	229955	Label	1	MAG500RS
1-63	229951	Label	1	CAUTION

2.MAG500RS
ACCESSORIES

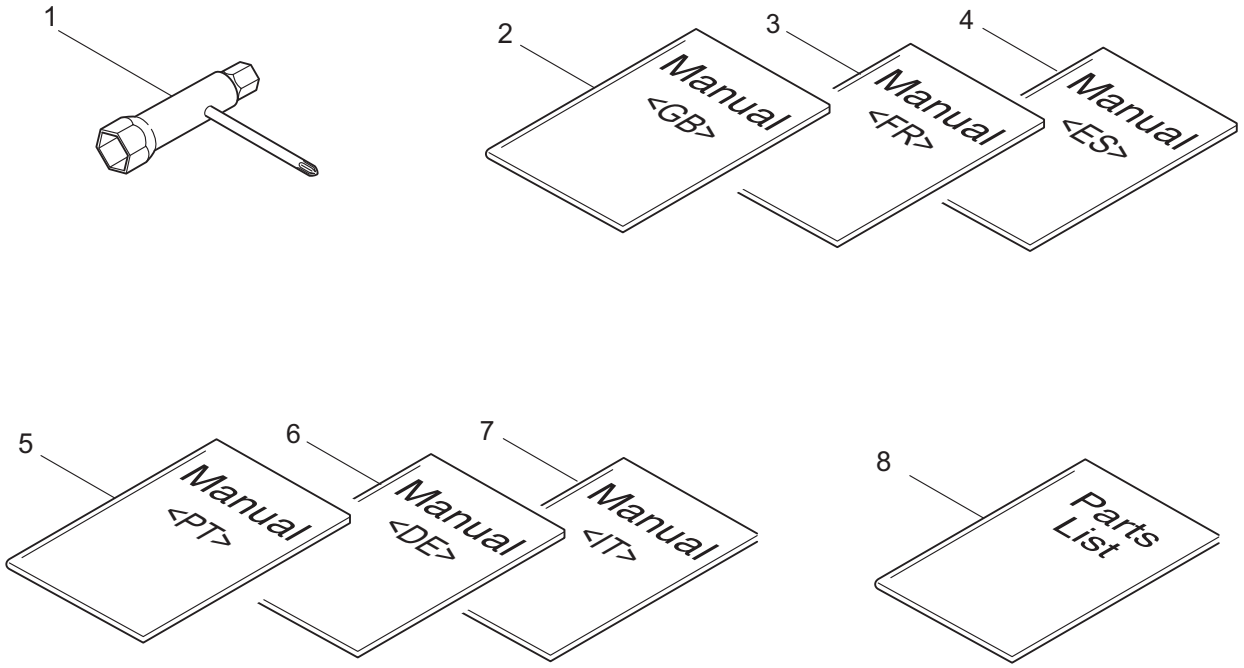

Ref. No.	Part No.	Part Name	Q'ty	Remarks
2-1	210418	Box Spanner	1	13x19x(+)
2-2	229956	Instruction Manual	1	MAG500RS<GB>
2-3	229984	Instruction Manual	1	MAG500RS<FR>
2-4	229985	Instruction Manual	1	MAG500RS<ES>
2-5	229986	Instruction Manual	1	MAG500RS<PT>
2-6	229987	Instruction Manual	1	MAG500RS<DE>
2-7	229988	Instruction Manual	1	MAG500RS<IT>
2-8	522633	Parts List	1	MAG500RS

3. MAG500RS
ENGINE

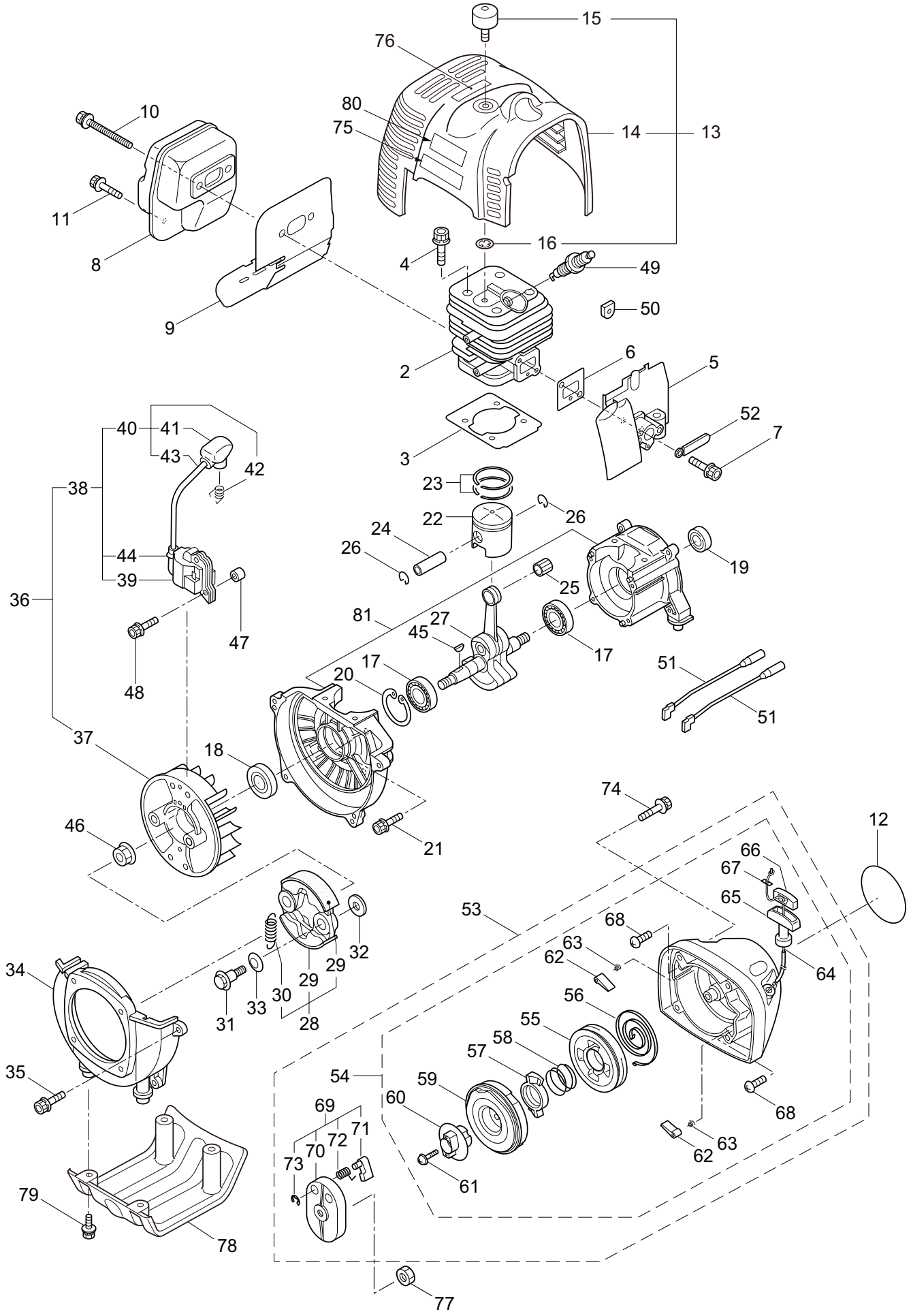

Ref. No.	Part No.	Part Name	Q'ty	Remarks
3-1	858470	Engine	1	NE500/17
3-2	283076	Cylinder	1	New gasket required
3-3	282259	Gasket	1	
3-4	261612	Cap Screw	4	M5x30
3-5	282261	Insulator	1	New gasket required
3-6	282262	Gasket	1	
3-7	267290	Cap Screw	2	M5x20
3-8	282264	Muffler Comp.	1	
3-9	282271	Gasket	1	
3-10	266713	Cap Screw	2	M5x60
3-11	283315	Screw	1	M5x12W-12
3-12	283284	Label	1	REVERSE2/NE500
3-13	286390	Top Cover Ass'y	1	Incl.14-16
3-14	282274	Top Cover	1	
3-15	285843	Knob	1	
3-16	286362	Washer	1	M6
3-17	262658	Bearing	2	#6202C3
3-18	262660	Oil Seal	1	TC15357
3-19	262565	Oil Seal	1	ISCD15257
3-20	012380	Snap Ring	1	#35
3-21	261612	Cap Screw	4	M5x30
3-22	283675	Piston	1	
3-23	282941	Piston Ring	2	(2)Required
3-24	262749	Piston Pin	1	
3-25	262659	Bearing,Needle	1	KTV111414EG01B2
3-26	262479	Clip,Piston Pin	2	
3-27	283038	Crankshaft/Conn.Rod Ass'y	1	
3-28	282743	Clutch Ass'y	1	Incl.29,30
3-29	282624	Clutch Shoe	2	(2)required
3-30	263617	Spring,Clutch	1	2.3-44.8L
3-31	283671	Cap Screw	2	M8x1.25
3-32	262683	Washer	2	8x22xt1.2
3-33	262682	Wave Washer	2	
3-34	282285	Fan Cover	1	
3-35	261250	Cap Screw	4	M5x20
3-36	284947	Magneto Ass'y	1	Incl.37-44
3-37	284948	Rotor/Fan	1	
3-38	282289	Ignition Coil Ass'y	1	Incl.39-44
3-39	267572	Coil	1	
3-40	282290	Spark Plug Wire Ass'y	1	Incl.41-43
3-41	282292	Plug Boot	1	
3-42	261075	Connector	1	
3-43	282291	Spark Plug Wire	1	
3-44	261072	Cap	1	
3-45	261076	Woodruff Key	1	3x10

3. MAG500RS
ENGINE

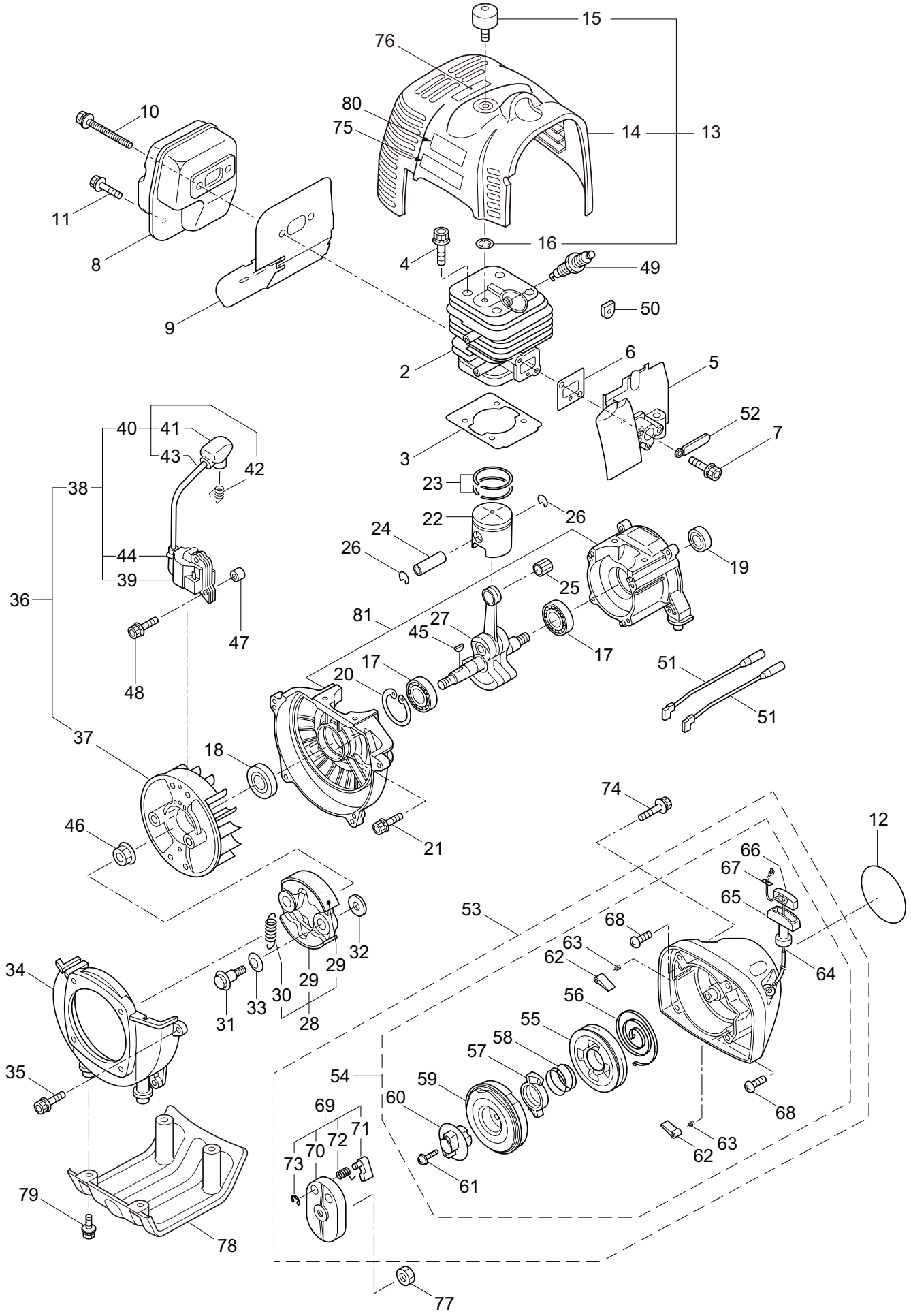

Ref. No.	Part No.	Part Name	Q'ty	Remarks
3-46	262731	Nut,Rotor	1	M10
3-47	280381	Spacer	2	
3-48	283669	Cap Screw	2	M4x25
3-49	262483	Spark Plug	1	NGK BPMR6Y
3-50	281172	Grommet	1	
3-51	267492	Lead	2	130L
3-52	264588	Clamp	1	
3-53	282294	Recoil Starter Ass'y	1	Incl.54-73
3-54	282295	Starter Ass'y	1	Incl.55-68
3-55	280994	Pulley	1	
3-56	280995	Spiral Spring	1	
3-57	280996	Pawl	1	
3-58	280997	Return Spring	1	
3-59	283123	Spring Comp.	1	
3-60	280999	Plate	1	
3-61	281000	Set Screw	1	
3-62	281001	Pawl	2	
3-63	281002	Return Spring	2	
3-64	281004	Starter Rope	1	
3-65	262633	Starter Grip	1	
3-66	262981	Cap	1	
3-67	281005	Rope Stopper	1	
3-68	282622	Screw	2	
3-69	282623	Starter Pulley Ass'y	1	Incl.70-73
3-70	282282	Starter Pulley	1	
3-71	262636	Pawl	2	
3-72	262637	Return Spring	2	
3-73	262638	E-Ring	2	
3-74	261607	Cap Screw	4	M5x16
3-75	262714	Label	1	MARUYAMA
3-76	267561	Label	1	
3-77	126990	Nut	1	M8
3-78	282317	Stand	1	
3-79	281714	Cap Screw	4	M5x20
3-80	265694	Label	1	
3-81	282277	Crankcase	1	

4. MAG500RS
CARBURETOR, FUEL TANK

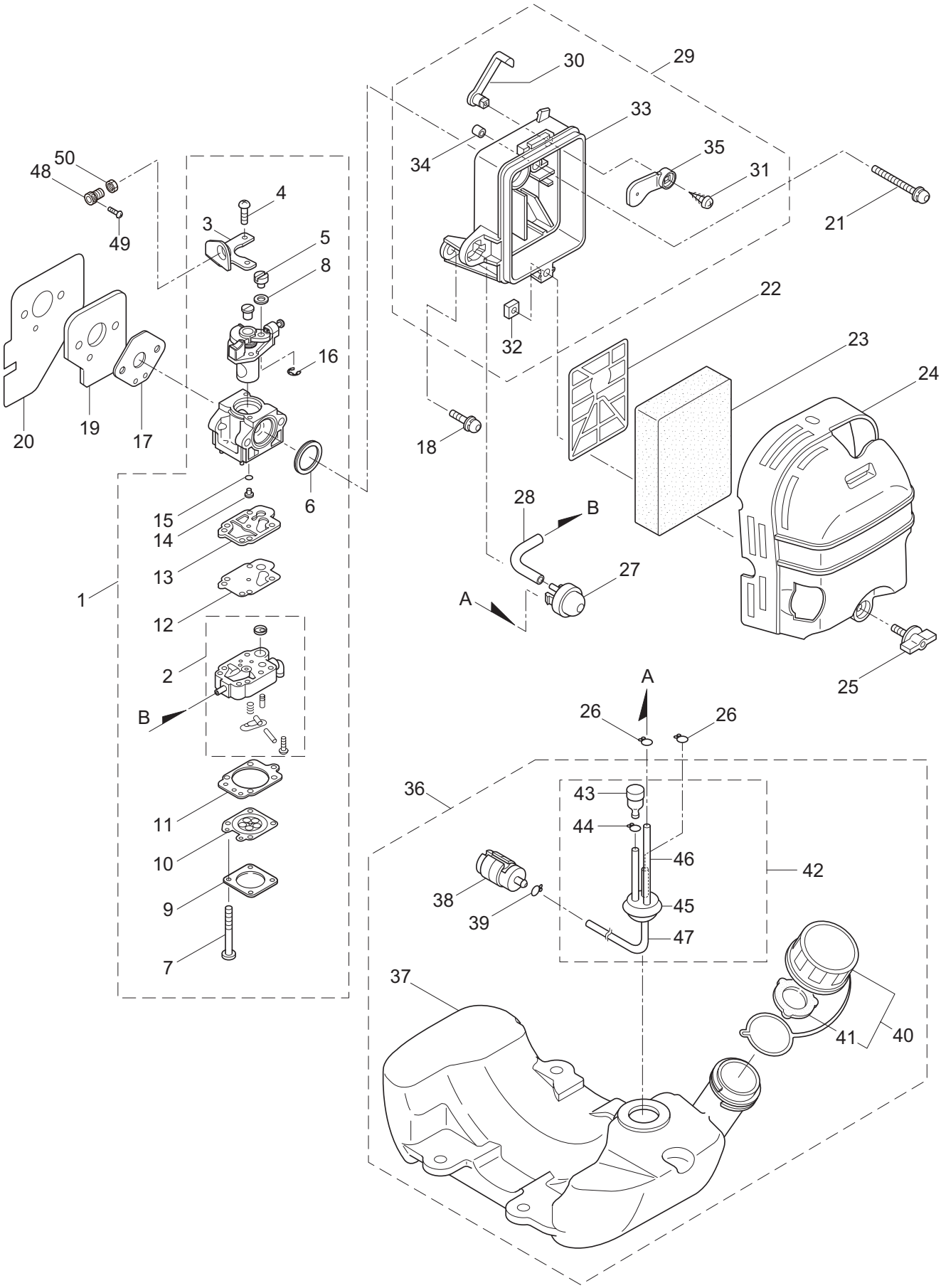

Ref. No.	Part No.	Part Name	Q'ty	Remarks
4-1	284109	Carburetor Ass'y	1	Incl.2-16 New gasket required
4-2	283124	Pump Body	1	
4-3	264677	Bracket	1	
4-4	261875	Screw	2	
4-5	261658	Swivel	1	
4-6	261657	Packing	1	
4-7	263737	Screw	4	
4-8	264678	Washer	1	
4-9	263726	Cover Plate	1	
4-10	283905	Diaphragm, Meterring	1	
4-11	263727	Gasket	1	
4-12	262994	Diaphragm,Fuel Pump	1	
4-13	282576	Gasket	1	
4-14	283125	Main Jet	1	
4-15	261871	O-Ring	1	
4-16	261876	E-Ring	1	
4-17	282301	Gasket	1	
4-18	264807	Cap Screw	1	M5x16
4-19	283086	Divider	1	
4-20	283087	Gasket	1	
4-21	262720	Cap Screw	2	M5x55
4-22	282481	Plate	1	
4-23	282306	Element	1	
4-24	282307	Cleaner Cover	1	
4-25	281438	Knob	1	
4-26	261117	Clip	2	
4-27	282299	Pump	1	
4-28	282512	Fuel Pipe	1	
4-29	282302	Case Ass'y	1	Incl.30-35
4-30	282305	Lever	1	
4-31	269032	Screw	1	
4-32	269423	Nut	1	
4-33	282303	Case Body	1	
4-34	282484	Sleeve	3	
4-35	282304	Valve	1	
4-36	282309	Fuel Tank Ass'y	1	Incl.37-47
4-37	282310	Fuel Tank	1	
4-38	267328	Fuel Filter Ass'y	1	
4-39	261117	Clip	1	
4-40	281564	Fuel Tank Cap Ass'y	1	Incl.41
4-41	269377	Gasket	1	
4-42	282312	Fuel Pipe Ass'y	1	Incl.43-47
4-43	261590	Breather	1	
4-44	261117	Clip	1	
4-45	268065	Grommet	1	

4. MAG500RS
CARBURETOR, FUEL TANK

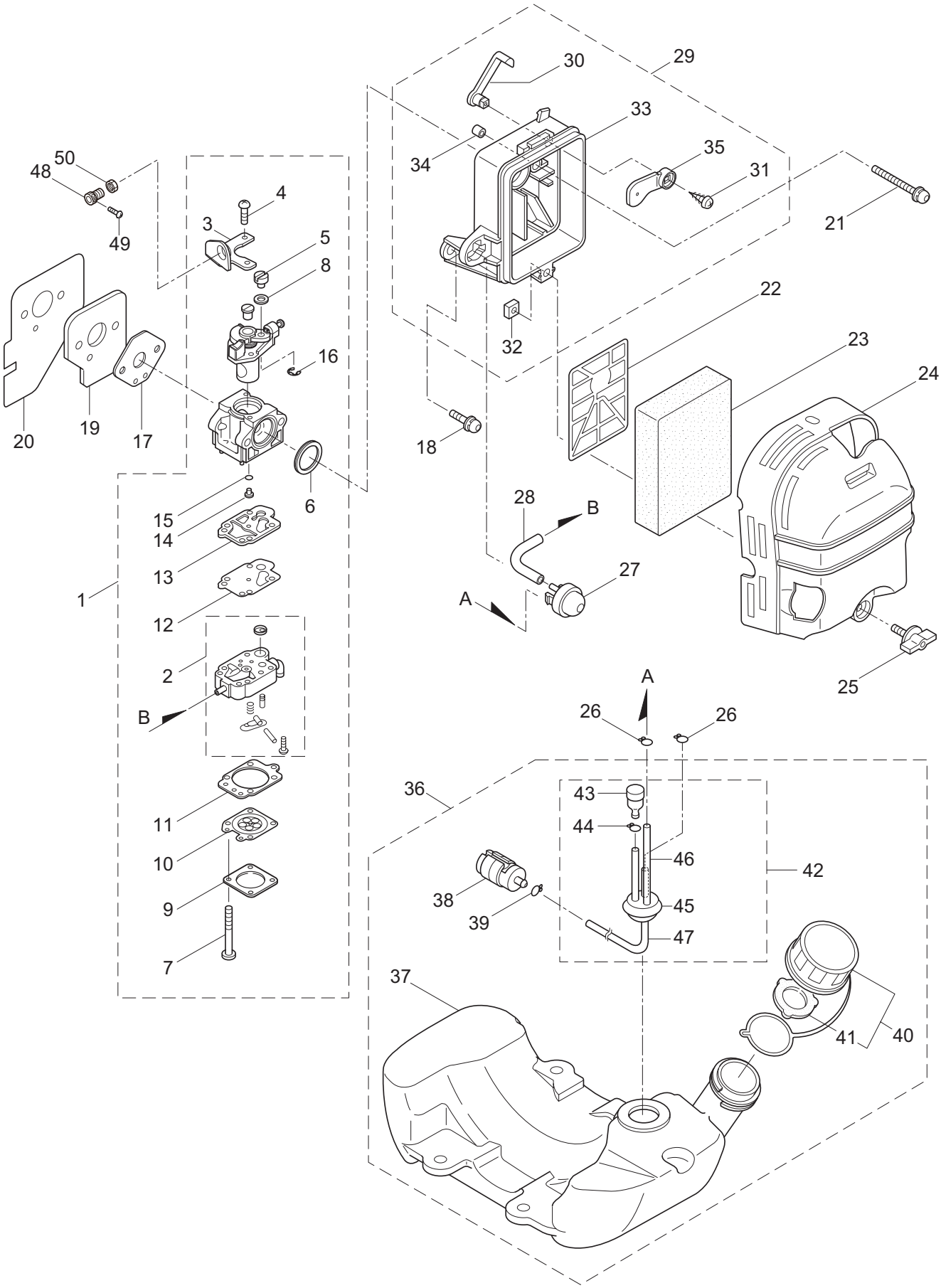

Ref. No.	Part No.	Part Name	Q'ty	Remarks
4-46	282511	Return Pipe	1	
4-47	262649	Fuel Pipe	1	
4-48	230044	Screw	1	
4-49	230045	Screw	1	
4-50	127218	Nut	1	M6